10W Single Output Series

- High reliability, low cost
- Built-in EMI filter
- 100% full load burn-in test
- Protections: overload/ short circuit
- 1 year warranty
- N601 100 x 58 x 31(mm)

AC input voltage range ..... 170~264VAC (210~370VDC)
Input frequency ..... 47~63Hz
Inrush current ..... cold start, 30A/230V
Input leakage current ..... ＜0.5mA/ 230VAC
Line regulation (full load) ..... ≤±0.5%
Output voltage adjust range ..... ±10%
Output overload protection ..... 110~150%
Withstand voltage ..... I/P -O/P: 1.5KVAC/1min
I/P -F/G: 1.5KVAC/1min
O/P-F/G: 0.5KVAC/1min
Rise time ..... 50ms@full load (typical)
Hold up time ..... 20ms@full load (typical)
Operating temp. & humidity ..... -10℃~+50℃, 20%~90%RH (non condensing)
Storage temp. & humidity ..... -20℃~+85℃, 20%~95%RH (non condensing)
Safety standards ..... design meet GB4943, UL60950, EN60950
EMC standards ..... design meet GB9254, EN55022 classA
EN61000-3-2,3, EN61000-4-2,3,4,5,6,8,11
Cooling method ..... convection

Model	DC Output		Load regul.	R&N	Efficiency
NO10W-S-5	5V	2.0A	0.5%	60mV	69%
NO10W-S-12	12V	1.0A	0.5%	80mV	72%
NO10W-S-15	15V	0.8A	0.5%	100mV	73%
NO10W-S-24	24V	0.5A	0.5%	100mV	76%
NO10W-S-48	48V	0.2A	0.5%	150mV	78%

* 3~48VDC output all available.
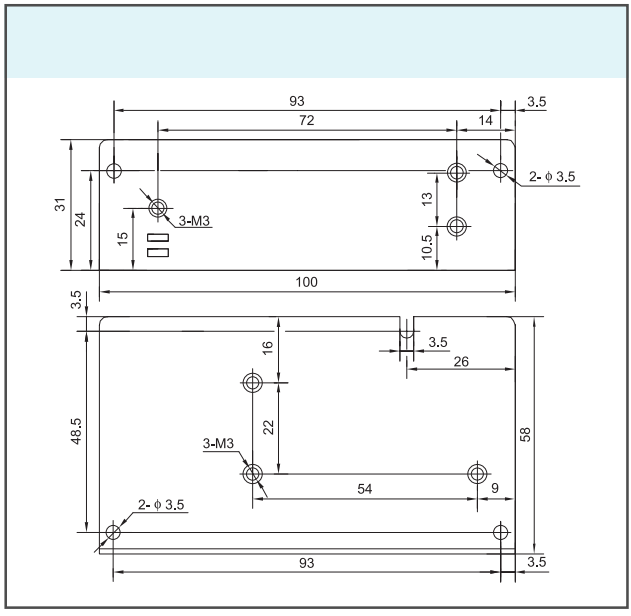
Drawing