50W Dual Output Mini-size Series

- Compact size, high reliability
- Built-in EMI filter
- 100% full load burn-in test
- 1 year warranty
- V1 is isolated from the other outputs
- Protections: overload/ short circuit
- N603 129 x 98 x 40(mm)

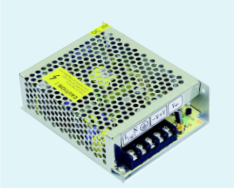

NO50W-SM

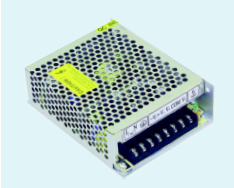

NO50W-DM, TM

AC input voltage range ..... 170~264VAC (210~370VDC)
Inrush current ..... cold start, 40A/230V
Input leakage current ..... ＜0.7mA/ 230VAC
Line regulation (full load) ..... ≤±0.5%
Load regulation ..... V_1: ≤± 1%
V_2,V_3: ≤± 6%
Output voltage adjust range ..... single output:± 10%, multi-output: V_1:± 5%
Output overload protection ..... 110~150%
Withstand voltage ..... I/P -O/P: 1.5KVAC/1min
I/P -F/G: 1.5KVAC/1min
O/P-F/G: 0.5KVAC/1min
Rise time ..... 50ms@full load (typical)
Hold up time ..... 20ms@full load (typical)
Operating temp. & humidity ..... -10℃~+50℃, 20%~90%RH (non condensing)
Storage temp. & humidity ..... -20℃~+85℃, 20%~95%RH (non condensing)
Safety standards ..... design meet GB4943, UL60950, EN60950
EMC standards ..... design meet GB9254, EN55022 classA
EN61000-3-2,3, EN61000-4-2,3,4,5,6,8,11
Cooling method ..... convection

Dual Output

Model	DC Output		R&N	Efficiency
NO50W-DM-A	5V	1.0~6.0A	100mV	71%
	12V	0.3~3.0A	120mV	
NO50W-DM-B	5V	1.0~6.0A	100mV	72%
	24V	0.2~2.0A	150mV	
NO50W-DM-C	12V	0.4~2.0A	120mV	74%
	-12V	0.1~2.0A	150mV	
NO50W-DM-D	27V	0.1~1.5A	150mV	76%
	27V	0.1~1.0A	200mV	
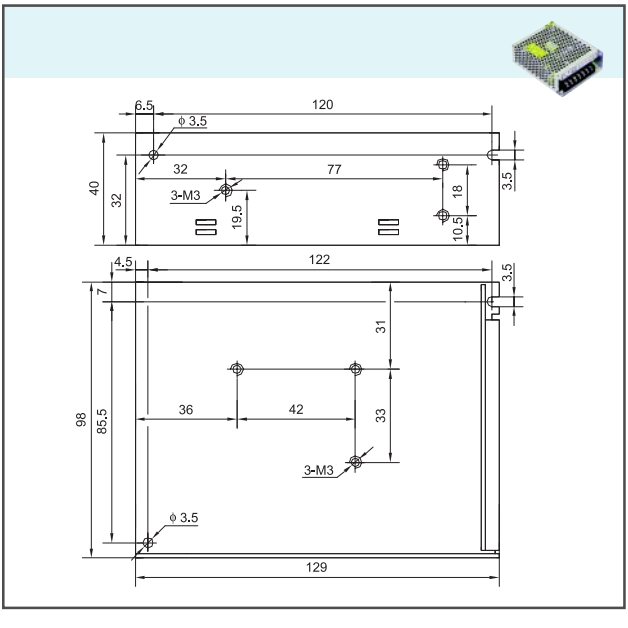
Drawing