70W DC/DC Series

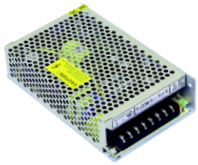

- High reliability
- Built-in EMI filter
- Protections: overload/ short circuit
- 1 year warranty
- N605 160 x 98 x 39(mm)
  146 x 81 x 38(mm) (option)

DC input voltage 24VDC, 48VDC, 110VDC
Line regulation (full load) ..... ≤±0.5%
Output voltage adjust range ..... ±10%
Output overload protection ..... 110~150%
Withstand voltage ..... I/P -O/P: 1.0KVDC/1min
I/P -F/G: 1.0KVDC/1min
O/P-F/G: 0.5KVDC/1min
Isolation resistance ..... ＞100MΩ@500VDC
Operating temp. & humidity ..... -10℃~+50℃, 20%~90%RH (non condensing)
Storage temp. & humidity ..... -20℃~+85℃, 20%~95%RH (non condensing)
Safety standards ..... design refer to LVD
EMC standards ..... design refer to EN55022, EN61000-4
Cooling method ..... convection

Model	DC Output		Load regul.	R&N	Efficiency
NO70W-SD**-12	12V	6.0A	0.5%	120mV	72%
NO70W-SD**-15	15V	4.7A	0.5%	150mV	72%
NO70W-SD**-24	24V	3.0A	0.5%	150mV	76%
NO70W-SD**-48	48V	1.5A	0.5%	200mV	82%
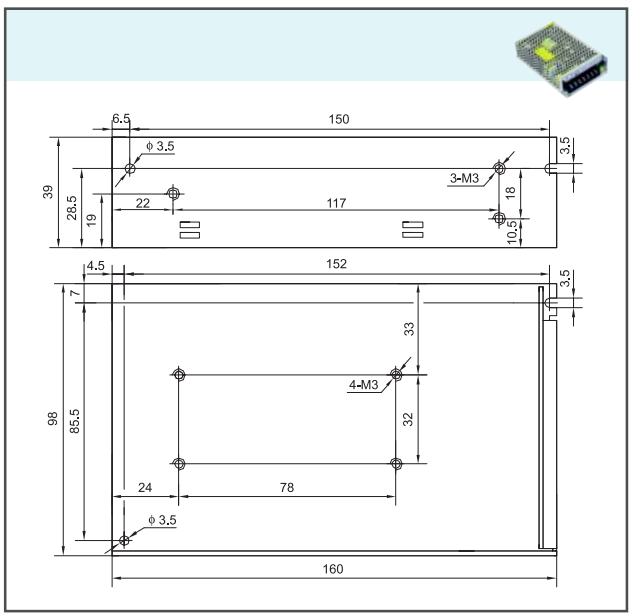
Drawing